Super Fast Rectifier Diodes

ES8A THRU ES8J 50 to 600 V 8.0A

RoHS COMPLIANT

FEATURES

- For surface mounted applications
- Low profile package
- Built-in strain relief
- Easy pick and place
- Fast Recovery times for high efficiency
- Plastic package has Underwriters Laboratory
- Flammability Classification 94V-O
- High temperature soldering : 260°C /10 seconds at terminals

MECHANICAL DATA

- Case: Molded plastic, SMC and DO-214AB
- Terminals: Solder Plated, Solderable per MIL-STD-750, Method 2026
- Polarity: Cathode Band or Cathode Notch
- Marking: Type Number

SMC(DO-214AB)

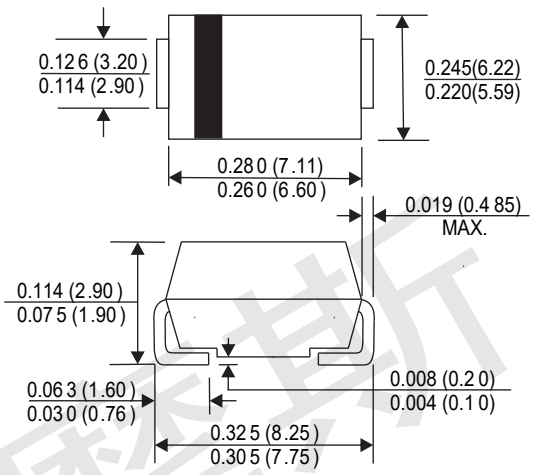

Dimensions in inches and (millimeters)

Maximum Ratings and Electrical Characteristics

Ratings at 25℃ ambient temperature unless otherwise specified. Single phase, half wave, 60HZ, resistive or inductive load. For capacitive load, derate current by 20%.

Type Number or marks	Symbols	ES8A	ES8B	ES8D	ES8G	ES8J	Units
Maximum Recurrent Peak Reverse Voltage	VRRM	50	100	200	400	600	Volts
Maximum RMS Voltage	VRMS	35	70	140	280	420	Volts
Maximum DC Blocking Voltage	VDC	50	100	200	400	600	Volts
Maximum Average Forward Rectified Current. Lead Length @Ta(Fig 1)	I(AV)	8.0					Amp
Peak Forward Surge Current,8.3ms single half-sine-wave superimposed on rated load (JEDEC method)	IFSM	200					Amp
Maximum Forward Voltage at 5.0A DC	VF	1.0			1.3	1.7	Volts
Maximum DC reverse current at rated DC blocking voltage per Tj=25℃ / Tj=100℃	IR	5.0 50					uAmp
Typical Thermal Resistance T_J =25℃	R_{θ} JL	20					℃/W
Typical Junction capacitance (Note2)	C_J	80					pF
Maximum Reverse Recovery Time (Note1)	TRR	35					nS
Operating Temperature Range	TJ	-55 to +150					℃
Storage Temperature Range	TSTG	-55 to +150					℃

Note:

1. Measured with I_F =0.5A, IR =1A, IRR =0.25A.
2. Measured at 1.0 MHz and applied reverse voltage of 4.0 V DC.
3. The typical data above is for reference only.

※**This product The above data sheet typical data meet the Mentioned standards,designers for reference only**

Ordering Information (Example)

Prefered P/N	Package code	Unit weight(g)	Minimum Package(pcs)	Inner box Quantity(pcs)	Outer carton quantity(pcs)	Delivery mode
SMC DO-214AB	F1	about 0.096	3000	6000	54000	13' reel

RATINGS AND CHARACTERISTIV CURVES

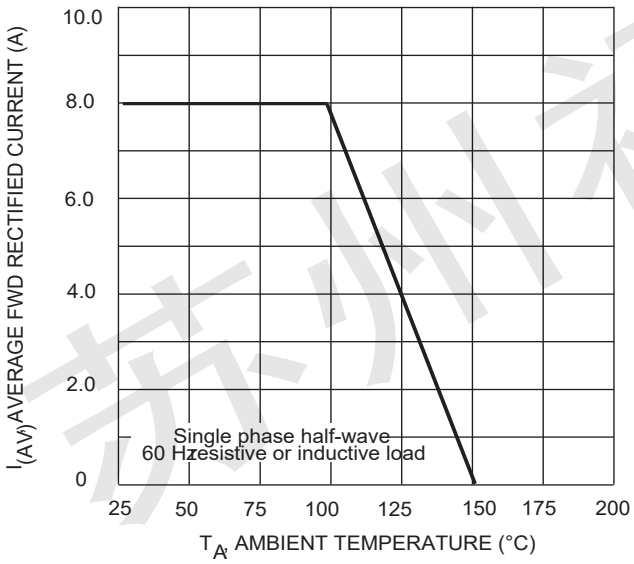

Fig. 1 Forward Derating Curve

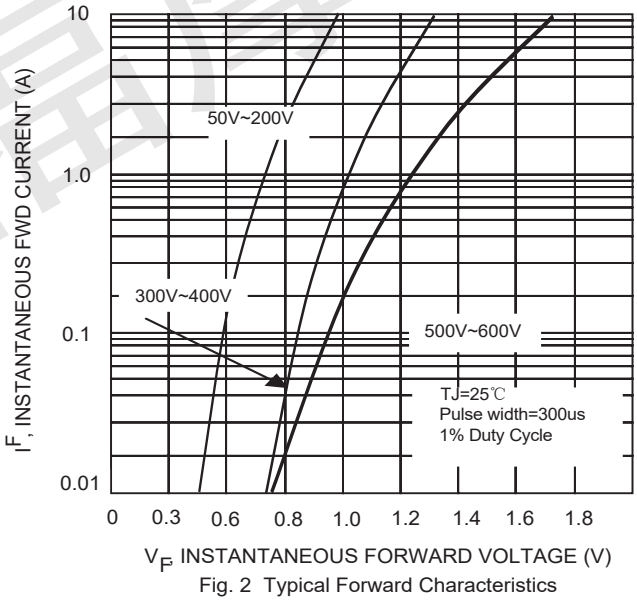

Fig. 2 Typical Forward Characteristics

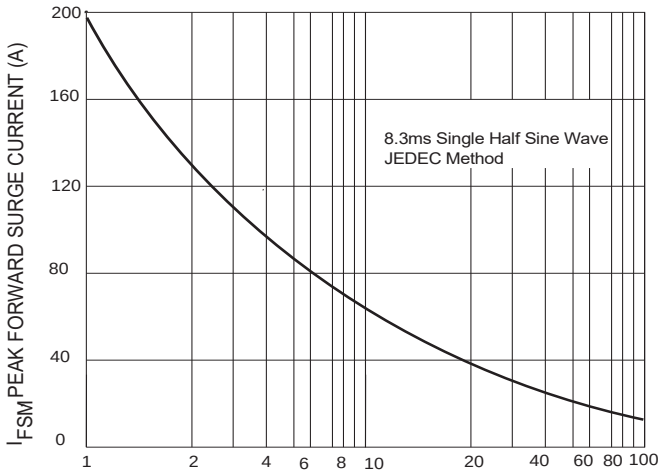

Fig. 3 Peak Forward Surge Current

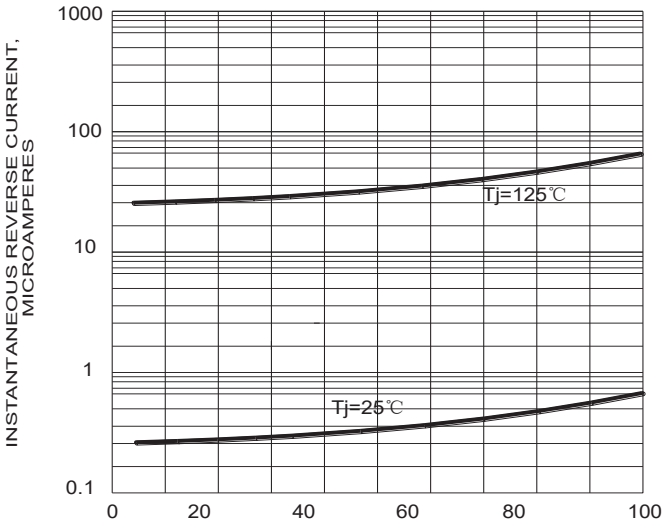

Fig 4-Typical Reverse Characteristics

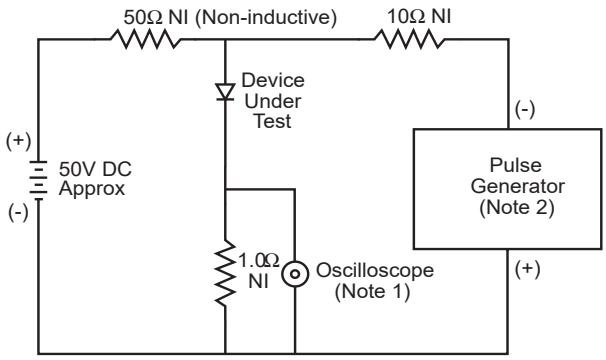

Notes:
1. Rise Time=7ns max .Inpot Impedance=1MΩ 22pf
2. Rise Time=10ns max.Sourse Impedance=50Ω

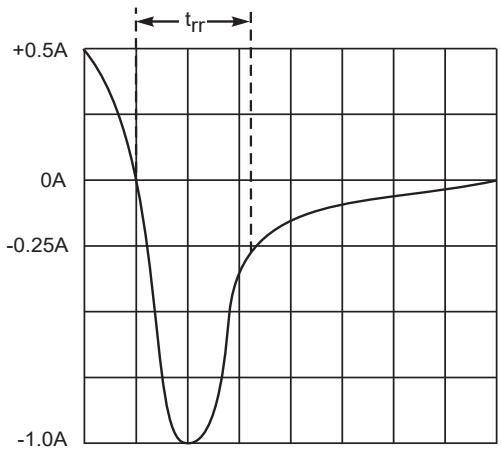

Set time base for 5/10ns/cm

Fig. 5 Reverse Recovery Time Characteristic and Test Circuit