Super Fast Rectifier Diodes

SF84G THRU SF89G 200 to 800V 8.0A

DO-27(DO-201AD)

RoHS COMPLIANT

FEATURES

- For surface mounted applications
- Low profile package
- Built-in strain relief
- Easy pick and place
- Fast Recovery times for high efficiency
- Plastic package has Underwriters Laboratory
- Flammability Classification 94V-O
- High temperature soldering : 260°C /10 seconds at terminals

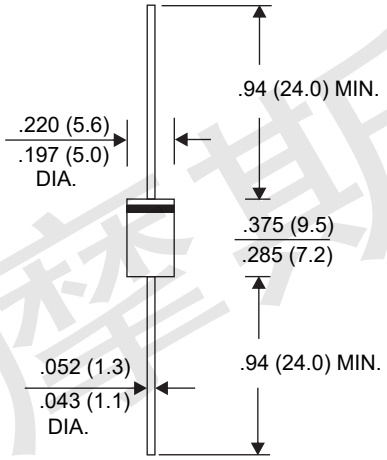

Dimensions in inches and (millimeters)

MECHANICAL DATA

- Case: Molded plastic, DO-27 or DO-201AD
- Terminals: Solder Plated, Solderable per MIL-STD-750, Method 2026
- Polarity: Cathode Band or Cathode Notch
- Marking: Type Number

Maximum Ratings and Electrical Characteristics

Ratings at 25℃ ambient temperature unless otherwise specified. Single phase, half wave, 60HZ, resistive or inductive load. For capacitive load, derate current by 20%.

Type Number or marks	Symbols	SF84G	SF86G	SF88G	SF89G	Units
Maximum Recurrent Peak Reverse Voltage	VRRM	200	400	600	800	Volts
Maximum RMS Voltage	VRMS	140	280	420	560	Volts
Maximum DC Blocking Voltage	VDC	200	400	600	800	Volts
Maximum Average Forward Rectified Current. Lead Length @Ta(Fig 1)	I(AV)	8.0				Amp
Peak Forward Surge Current, 8.3ms single half-sine-wave superimposed on rated load (JEDEC method)	IFSM	200				Amp
Maximum Forward Voltage @$I_{(AV)}$	VF	1.0	1.3	1.7	1.85	Volts
Maximum DC reverse current at rated DC blocking voltage per T_j=25℃ / T_j=100℃	IR	10.0 500				uAmp
Typical Thermal Resistance T_J =25℃	R_θ JC	2.0				℃/W
Maximum Reverse Recovery Time (Note 1)	TRR	35			75	nS
Typical Junction Capacitance (Note 2)	CJ	150				pF
Operating Temperature Range T_J	T_J	-55 to +150				℃
Storage Temperature Range	T_{STG}	-55 to +150				℃

Note:

1. Measured with I_F =0.5A, IR =1A, IRR =0.25A.
2. Measured at 1.0 MHz and applied reverse voltage of 4.0 V DC.
3. The typical data above is for reference only.

※**This product The above data sheet typical data meet the Mentioned standards,designers for reference only**

※ Ordering Information (Example)

Prefered P/N	Package code	Unit weight(g)	Minimum Package(pcs)	Inner box Quantity(pcs)	Outer carton quantity(pcs)	Delivery mode
DO-27	T1	about 1.05	1250	1250	12500	Tape
DO-201AD	B1	about 1.05	250	250	12500	Bulk
DO-201AE	B2	about 1.05	250	250	10000	Bulk

RATINGS AND CHARACTERISTIV CURVES

RoHS COMPLIANT

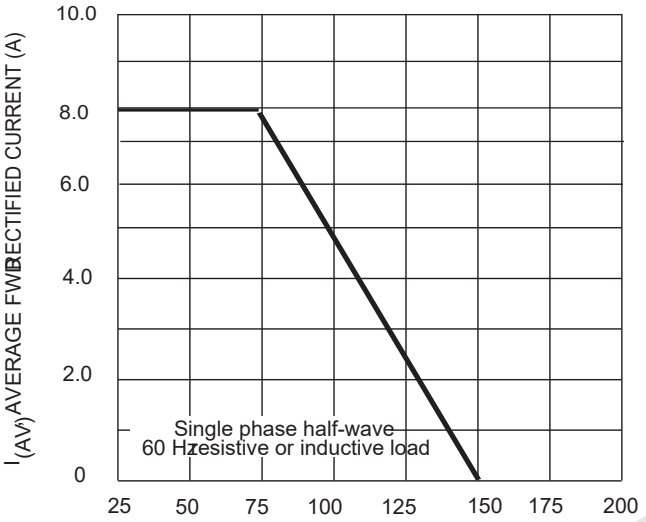

Fig. 1 Forward Derating Curve

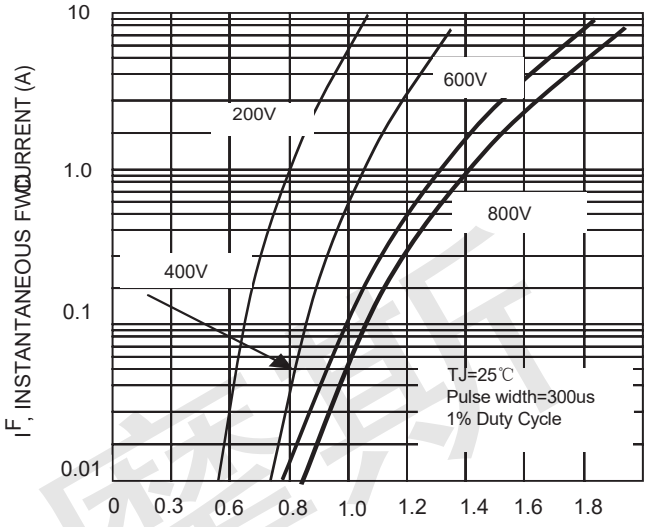

Fig. 2 Typical Forward Characteristics

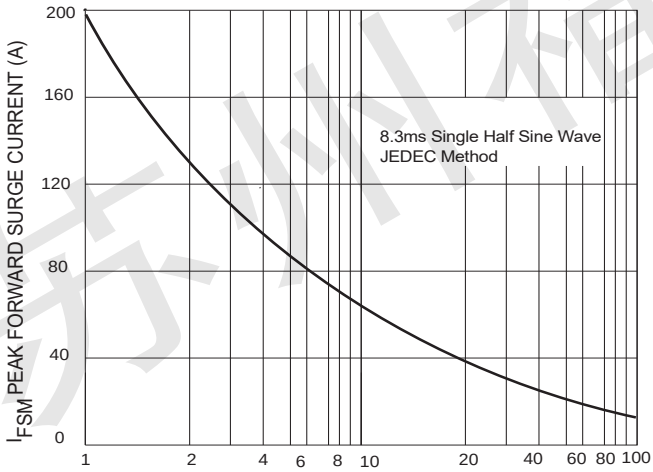

Fig. 3 Peak Forward Surge Current

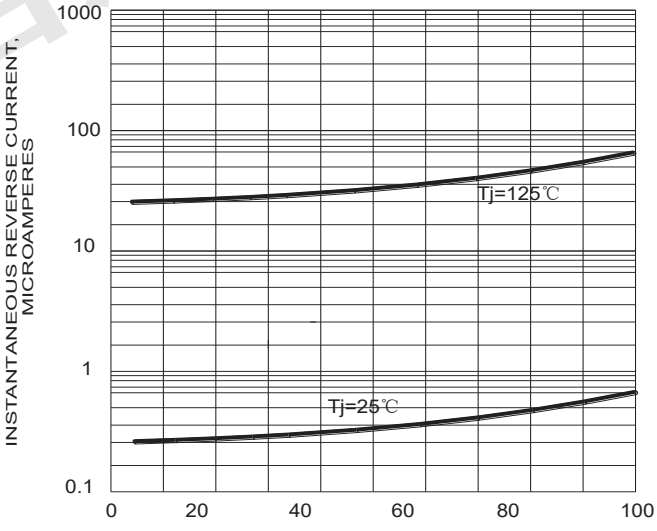

Fig 4-Typical Reverse Characteristics

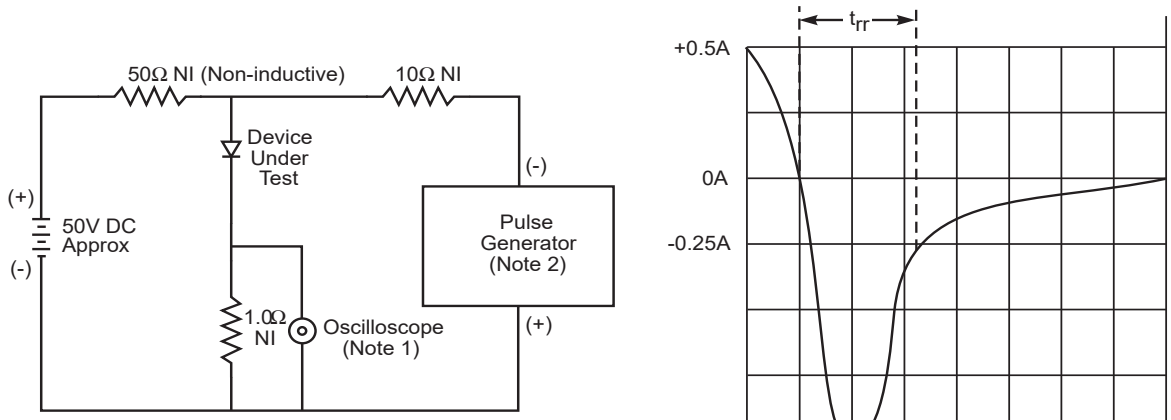

Notes:
1. Rise Time=7ns max .Inpot Impedance=1MΩ 22pf
2. Rise Time=10ns max.Sourse Impedance=50Ω

Fig. 5 Reverse Recovery Time Characteristic and Test Circuit